Ver. 2.5en

WBA4100-FM04 Series

C-Band DWDM
Booster EDFA Module

Technical Specification

Hangzhou Huatai Optic Tech. Co.,Ltd

CONTENT

1.0 PRODUCT DESCRIPTION

Huatai WBA4100-FM04 series used 100 x 130 x 19mm compact package, is a digital control circuit of DWDM power amplifier function module. Products using the most excellent optical properties, electronic control technology and complete software function is most advanced, wide wavelength range, low noise, excellent gain flatness characteristics and transient characteristics. Application for C-Band 44 wave or the 88 wave of DWDM system.

WBA4100-FM04 has two kinds of function versions are available:

1. Standard version: provides a fixed gain control mode (FGA), the pump current control mode (ACC)

2. Enhanced version: In addition to the standard version with the control functions, increasing the variable gain control mode (VGA, AGC), Variable output power control mode (VPA, APC).

WBA4100-FM04 enhanced version, for DWDM systems, providing a flexible, high-performance, low-cost networking applications.

2.0 PRODUCT FEATURE

- With Digital Control Electronics (Full Function)
- Wide working wavelength: 1529.16~1563.86nm
- Accord with the communication technology requirements of 44 channels DWDM system
- Excellent gain flatness feature (GF<1.0dB)
- Excellent Transient feature
- Low noise figure.
- Standard RS232 communication interface.
- Compact package (100×130×19mm)
- Low power consumption,Wide operating temperature range
- Excellent P/P ratio in area.

3.0 MAIN APPLICATION

- 44 channels DWDM system
- Metropolitan and access networks
- Optical Add/Drop and Cross-Connects
- FTTx PON

4.0 Software Function monitoring and alarm

Function, Monitoring, Alarm		Standard version	Enhanced version
Functions	In-Service Firm ware Upgrades	√	√
	Auto Shut Down	√	√
	Fixed Gain Mode (FGA)	√	√
	Variable Gain Control Mode (VGA, AGC)	×	√
	Variable output power control mode (VPA, APC)	×	√
	Pump Current Control Mode (ACC)	√	√
	Pump Maximum Working Current limit Protection	√	√
Monitors	Total input power	√	√
	Total output power	√	√
	Pump status	√	√
	Chassis temperature	√	√
Alarms	Loss-of-signal alarm	√	√
	Chassis temperature alarm	√	√
	Pump temperature alarm	√	√
	Pump bias alarm	√	√

5.0 TECHNICAL INDEX

Performance			Index			Supplement
			Min.	Typ.	Max.	
Optical feature	Work wavelength range(λ)	(nm)	1529.16		1563.86	ITU 88CH
	No. of Working channel	(CH)	1	44		
	Input optical power range (Pi)	(dBm)	-10		+6	
	Saturation output optical power (Po)	(dBm)	14		22	Customer selection
	Variable output power range	(dB)	-6		0	Enhanced version
	Signal gain	(dB)	13		27	Customer selection
	Variable gain range	(dB)	-12		0	Enhanced version
	Gain flatness	(dB)		0.7	1.0	Value of Peak to Peak
	Noise figure	(dB)		5.0		Max output, max gain
	Polarization dependence gain	(dB)			0.3	
	Polarization mode dispersion	(ps)			0.3	
	Polarization dependence loss	(dB)			0.3	
	Input/output optic isolation	(dB)	30			
	Pump leakage power	(dBm)			-30	
	Echo loss	(dB)	45			UPC
			55			APC
	Wavelength range of optic management channel	(nm)	1500	1510	1520	
Transient feature	Transient suppression time	(μs)			700	16dB Add/Drop
	Transient Overshoot	(dB)	-1.5		+1.5	16dB Add/Drop
	Transient gain changes	(dB)	-0.5		+0.5	
General feature	Communication interface		RS232			
	Fiber type		Coming SMF-28™ or equivalent			
	Pigtail buffer diameter	(μm)		900		
	Pigtail length	(mm)		1000		

	Power supply	(V)	+4.75	+5	+5.25	
	Power consumption	(W)		2.0	10	
	Working temp.	(°C)	-5		+70	
	Storage temp.	(°C)	-40		+85	
	Working relative humidity	(%)	+5		+95	
	Size (W)×(D)×(H)	(mm)	100×130×19			

6.0 OPTICAL/ELECTRICAL SCHEMATIC

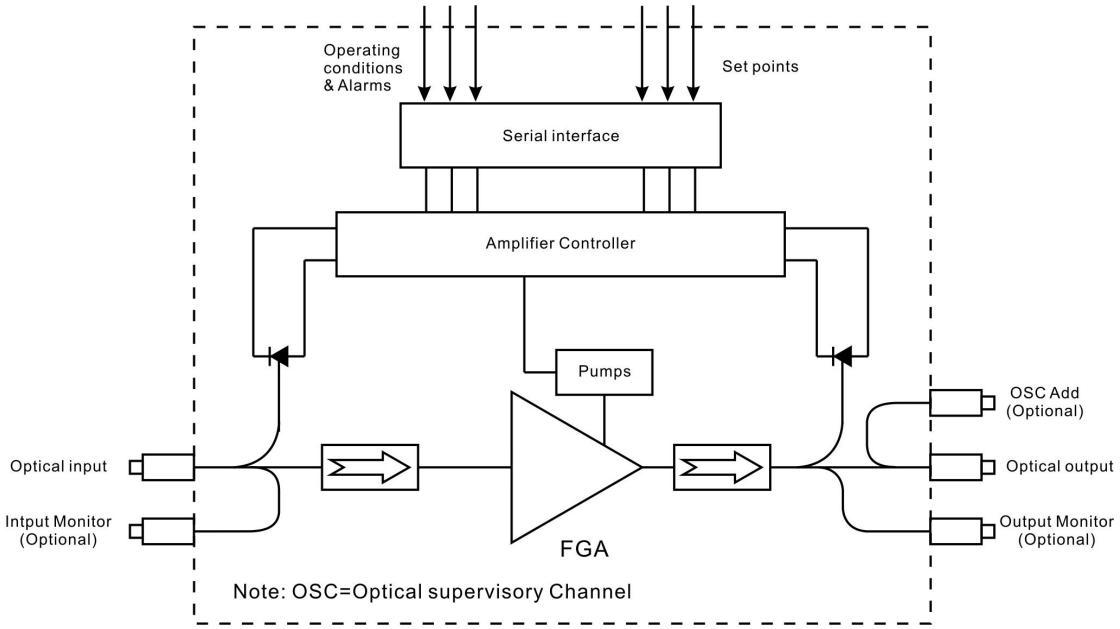

7.0 MODULE CHASSIS SIZE

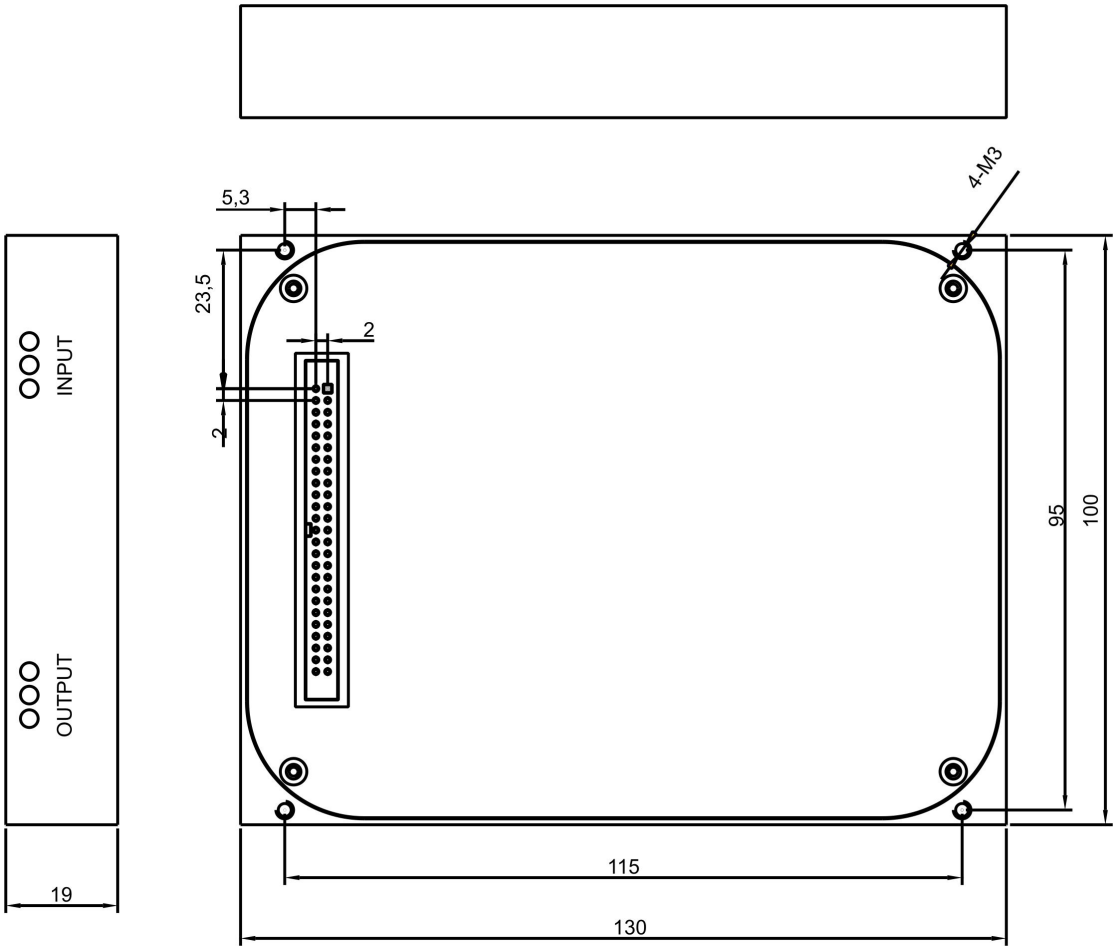

8.0Electrical Pin Assignments

Pins	Description	Pins	Description
1	Power supply	2	Power supply
3	Power supply	4	Power supply
5	Power supply	6	Power supply
7	Ground	8	Ground
9	Ground	10	Ground
11	Reserved (do not connect)	12	Output reflection alarm
13	Ground	14	Resent input
15	Serial input	16	Serial output
17	Pump current alarm	18	Stage 1 input LOS alarm
19	Ground	20	Ground
21	Reserved (do not connect)	22	Reserved (do not connect)
23	Reserved (do not connect)	24	Reserved (do not connect)
25	Ground	26	Reserved (do not connect)
27	Stage 2 input LOS alarm	28	Ground
29	Stage 2 output/Gain alarm	30	Ground
31	Ground	32	Ground
33	Case temperature alarm	34	Stage 1 output / Gain alarm
35	Pump temperature alarm	36	Pin is absent (Polarization key)
37	Amplifier disable input	38	Output Power mute input
39	I2C SCL (Optional)	40	I2C SDA (Optional)
41	Ground	42	Ground
43	Ground	44	Ground
45	Power supply	46	Power supply
47	Power supply	48	Power supply
49	Power supply	50	Power supply

9.0 PRODUCT SERIES

Model	Stauration power	Signal gain (dB)	Gain flatness (dB)	The Function Version	Monitor optical port mode	OSC Optical port mode
WBA4118-G □□-FM04	18dBm	14,17, 20,22, 24, 27 Optional	<1.0	1, FG: Standard Version (FGA) 2, VG: Enhanced Version (VGA)	1, M00:WithOut monitor 2, MO: With output monitor 3, MI: With input monitor 4, MIO: With input and output monitor	1、O00: WithOut OSC 2、OA: OSC / Add
WBA4120-G □□-FM04	20dBm					
WBA4122-G □□-FM04	22dBm					

10.0 ORDERING INFORMATION

WBA 4 1 □□ – G□□ – FM 04 – □□ – □□ / □□ – M□□ – O□□

DWDM Booster EDFA Moduel	Operation wavelength		Product type		Stauration power		Gain		Module type		Module size number		The Function Version		Connncrtor		Connncrtor		Monitor options		OSC options	
	4	C-Band 44 or 88 CH	1	BA	18	18dBm	14	14dB	FM	Full Function Module	04	100×130×22mm	FG	Standard Version FGA	SP	SC/UPC	05	0.5m	M00	Without monitor	O00	Without OSC
					20	20dBm	17	17dB							SA	SC/APC	08	0.8m				
					22	22dBm	20	20dB			02	70×90×15mm	VG	Enhanced Version VGA	LP	LC/UPC	10	1.0m	MO	With output monitor	OA	OSC/Add
							22	22dB							LA	LC/APC						
							24	24dB			05	125×150×22mm			FP	FC/UPC			MI	With intput monitor		
							27	27dB							FA	FC/APC			MIO	With input & output monitor		